LD90

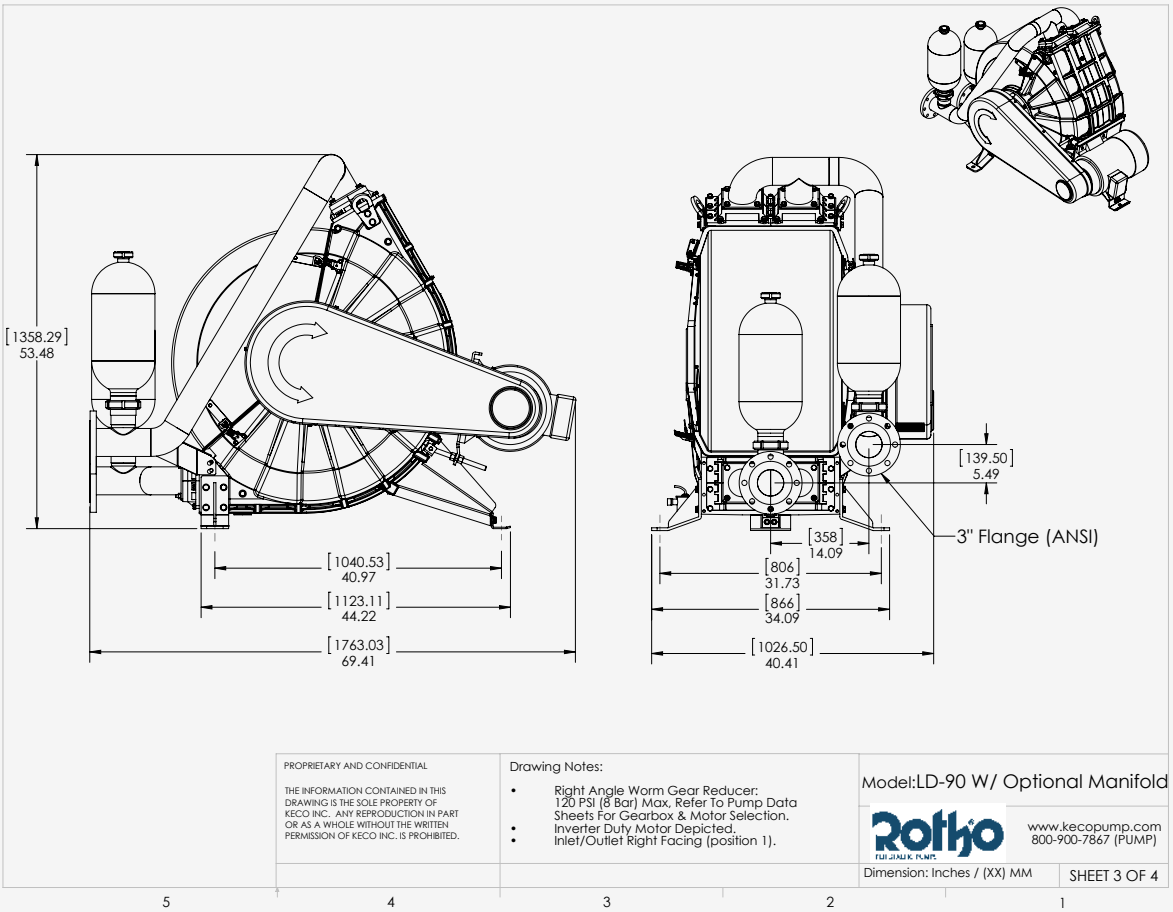
[1358.29]
53.48
[1040.53]
40.97
[1123.11]
44.22
[1763.03]
69.41
[139.50]
5.49
3" Flange (ANSI)
[358]
14.09
[806]
31.73
[866]
34.09
[1026.50]
40.41
PROPRIETARY AND CONFIDENTIAL
THE INFORMATION CONTAINED IN THIS DRAWING IS THE SOLE PROPERTY OF KECO INC. ANY REPRODUCTION IN PART OR AS A WHOLE WITHOUT THE WRITTEN PERMISSION OF KECO INC. IS PROHIBITED.
Drawing Notes:
• Right Angle Worm Gear Reducer: 120 PSI (8 Bar) Max, Refer To Pump Data Sheets For Gearbox & Motor Selection.
• Inverter Duty Motor Depicted.
• Inlet/Outlet Right Facing (position 1).
Model:LD-90 W/ Optional Manifold
Rotho
www.kecopump.com
800-900-7867 (PUMP)
Dimension: Inches / (XX) MM
SHEET 3 OF 4
5
4
3
2
1